MODEL X6K9AM

Extruded Aluminum Louver • 4″ Deep • Adjustable Straight Blades • Non-Drainable • Concealed Actuator

Standard Construction and Materials

FRAME: .081” thk. (nominal) extruded aluminum, 6063-T52/T6 alloy.
BLADE: .081” thk. (nominal) extruded aluminum 6063-T52/T6 alloy. Blades are approximately 4” on centers.
LOUVER FACE: Full width sill with drain head and non-drain blades contained within drain jambs.
SHAFT: .50” dia aluminum “Pin-Lock” rod.
BEARINGS: “Double Sealed” bearing, with inner bearing riding inside a polycarbonate outer bearing, designed so that Celcon bearing material will not cause metal to metal friction.
LINKAGE: Extruded aluminum, concealed in the channel out of the airstream. The pivots, which rotate in Celcon bearings, are .50” dia. plated and machined steel. The pivot is locked to the 5⁄16” dia. aluminum linkage rod by a ¼ - 20 set screw with epoxy locking patch.
SEALS: Extruded silicone rubber seals at blade edge. Polyurethane at jambs.
SCREEN: (When indicated, in a removable frame) ½” flattened aluminum, .051” thk,
-or- Insect screen 18⁄16 aluminum mesh, .011” dia,
-or- ½” sq. mesh intermediate double crimped aluminum wire, .063” dia.
FINISH: Mill.
ACTUATOR: 120 VAC, spring return normally closed. 133 in-lbs. torque.

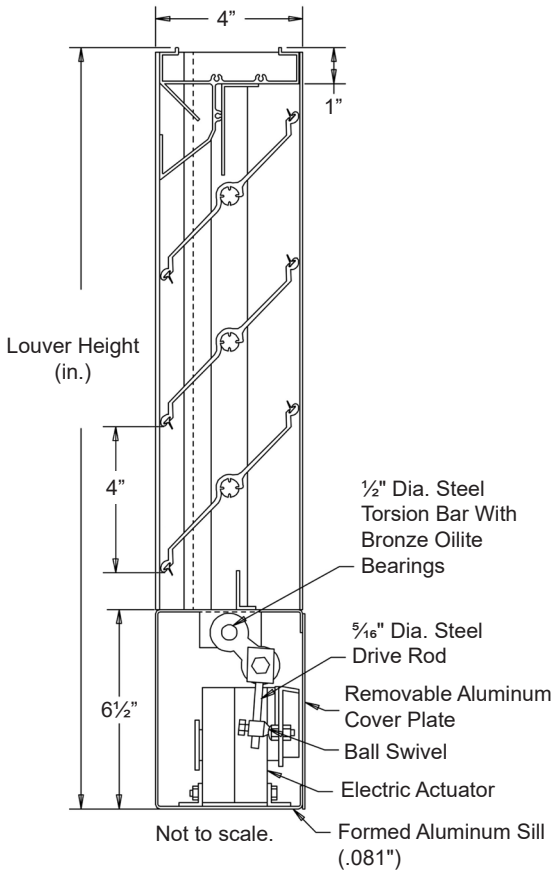

Options

Finishes - Enamels, Epoxies, etc.
Other screens also available.

Notes

1. ½” nominal deduction will be made to the opening size given.
2. Approximate shipping weight is 5.0 lbs./sq.ft.

Louver Sizes

Min Panel	Max Single Panel
12”W x 19”H	48”W x 96”H

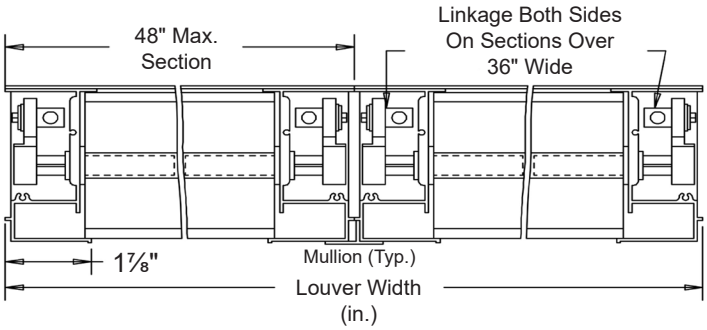

Item #	Qty	Width	Height	Width	Height	Mullion	Type	Location		
		Opening Size		Louver Size			Screens			Union Made

Arch. / Eng.:		EDR:		ECN:		Job:
Contractor:						
Project:		Date:		DWN:		DWG:

In the interest of product development, Cesco Products reserves the right to make changes without notice.

Division of Mestek
Member of AMCA

450 Riverside Dr • Wyalusing PA, 18853
Phone: 570-746-1888 • Fax: 570-746-9286
www.cescoproducts.com